東莞永力電業有限公司

YUNG LI CO., LTD

No.32,Dapu Industrial St.,,GangZi,Chang Ping Town,
DongGuan City,GuangDong Province,China 523571

TEL:0769-83396797~8 **FAX:0769-83396796**
E-mail: sales@yung-li.com

Description: YP-61A/YC-12

Customer: MAG

Parts No.: CB-N-UK-1M

Draw No.: CY-B0751

REVISION RECORD

1		
2		
3		
4		
5		

YUNG LI	
CHECKED	PREPARED BY

CUSTOMER	APPROVED

MARKING:YP-61A YUNG-LI $\frac{10}{250}$~ BS1363/A 2018 APPR. BY ASTA LIC 1359 L00244A SAFETY MARK 180890-12 (for mains plug) SS 145/A SASO 2203 MS 589/A MADE IN CHINA

NSW22012

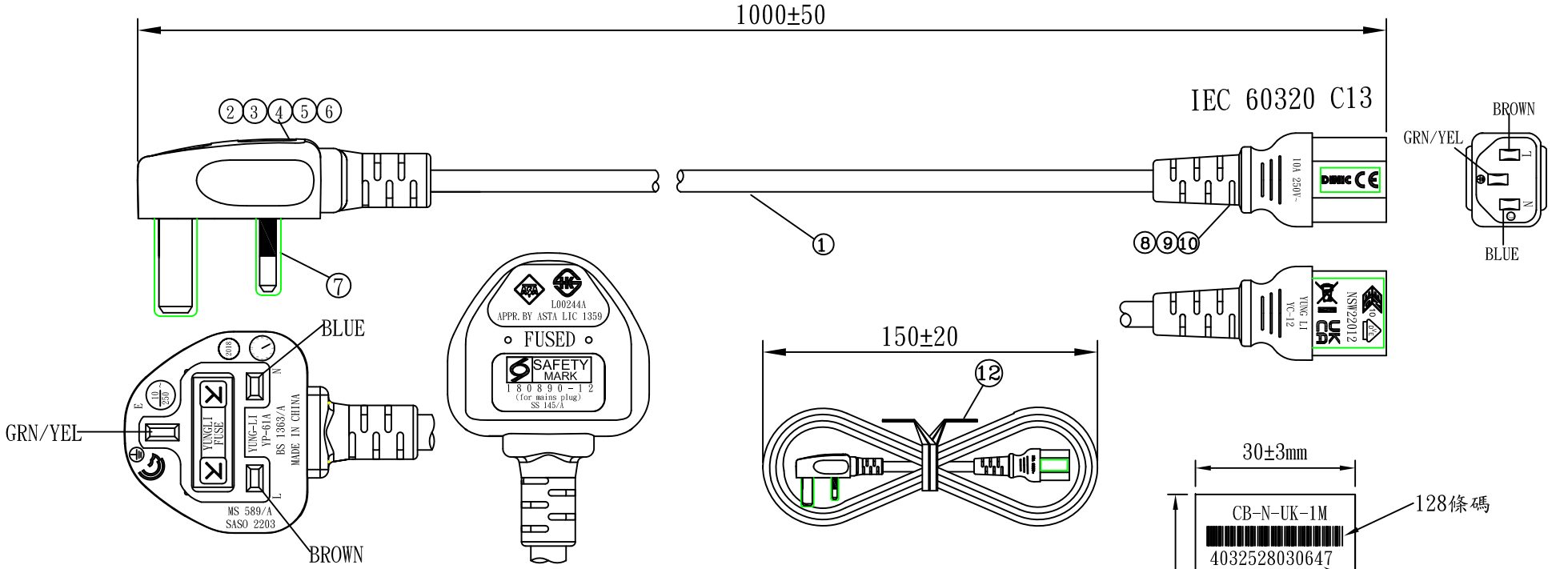

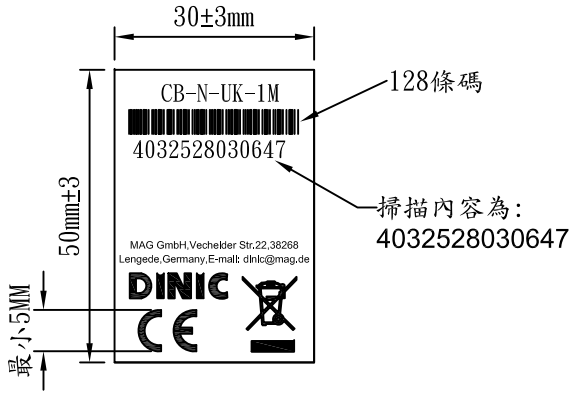

NO.	SPECIFICATION	QTY	REMARK
1	H05VV-F 3G 0.75mm² BLACK	1PC	
2	YP-61A PVC PLASTIC:60P BLACK	54g/PC	
3	FRAME: BLACK	1PC	
4	FUSE LID: BLACK	1PC	
5	FRAME LID	1PC	
6	FUSE:10A	1PC	
7	SLEEVE WHITE	1PC	
8	YC-12 INNER BODY	1PC	
9	TER:97740BS-0	3PCS	
10	YC-12 PVC PLASTIC:50P BLACK	18g/PC	
11	MINI TIE:L=130mm BLACK	1PC	
12	LABEL:50x30mm	1PC	

Tolerance >0±0.30 >1.0±0.50 >10.0±1.0 >20.0±2.0 Angle: ±1°	Approved		Date		YUNG LI CO.,LTD			
	Checked		Date					
	Drawn	SUKI	Date	25.03.04	Customer	MAG		
	Cat.No.	YP-61A/YC-12			P/N.	CB-N-UK-1M		
	Drawing No.	CY-B0751	Rev.	B	Material	P.V.C	Unit	mm
					HEFT(g)			

MARKING:YP-61A YUNG-LI $\frac{10}{250}$~ BS1363/A 2020 APPR. BY ASTA LIC 1359 L00244A SAFETY MARK 180890-12 (for mains plug) SS 145/A SASO 2203 MS 589/A
MADE IN CHINA

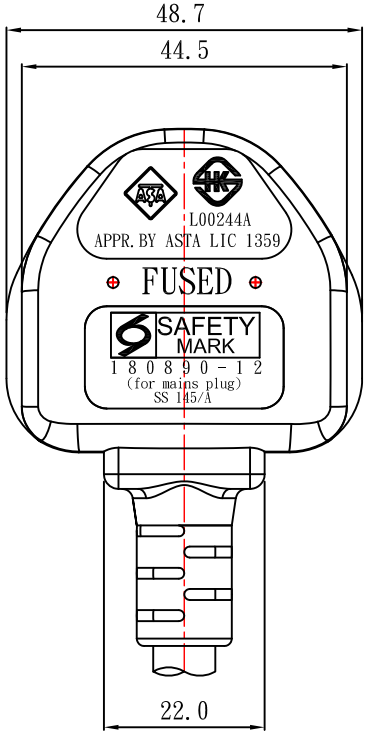

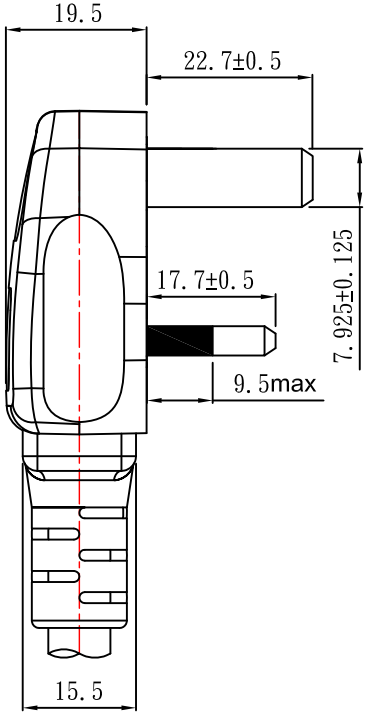

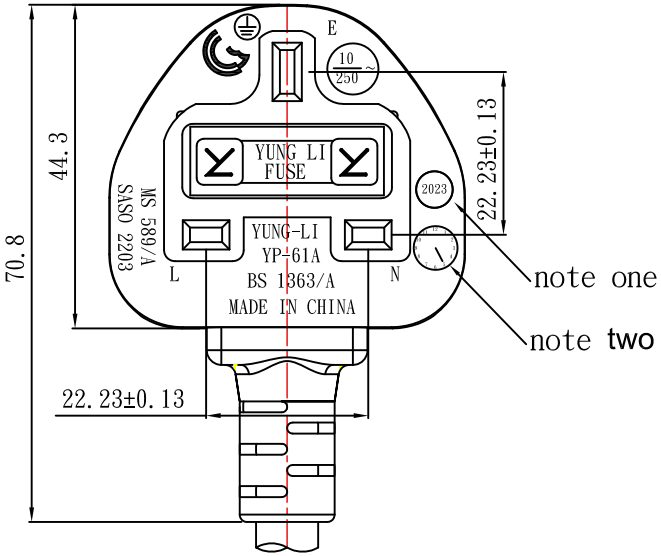

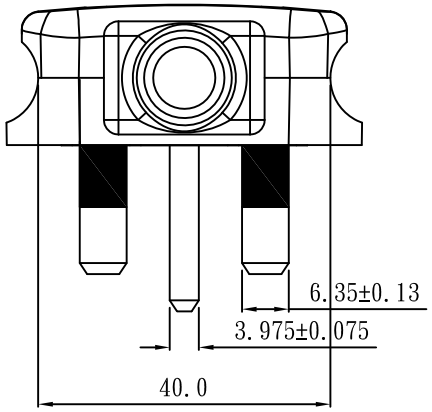

note one:production of year.(must be changed every year)

note two:production of month point(must be changed every month)

TOLERANCE >0±0.30 >1.0±0.50 >10.0±1.0 >20.0±2.0 Angle: ±1°	APPROVED		DATE		YUNG LI CO.,LTD		
	CHECKED		DATE				
	DRAWN	周淑萍	DATE	24.07.15			
	TYPE	YP-61A			P/N		
					MATERIAL	PVC	UNIT mm
	DRAWING NO.				SCALE	1:1	

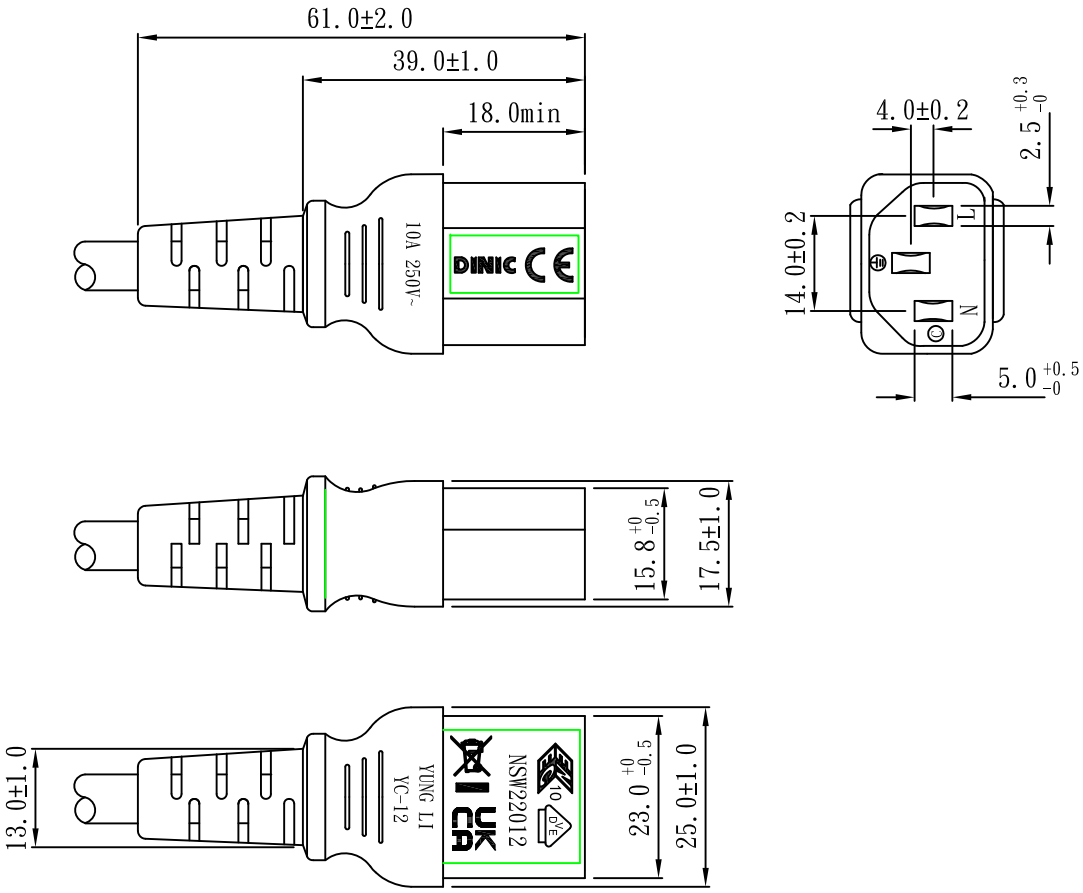

TOLERANCE >0±0.30 >1.0±0.50 >10.0±1.0 >20.0±2.0 Angle: ±1°	APPROVED		DATE		YUNG LI CO.,LTD			
	CHECKED		DATE					
	DRAWN	Huanghaiyan	DATE	23.11.15				
	TYPE	YC-12（UKCA）			P/N	MAG		
					MATERIAL	P.V.C	UNIT	mm
	DRAWING NO.		REV	B	SCALE	1:1		

YUNG LI CO., LTD
SPECIFICATION

Yung Li	Style	PVC FLEXIBLE CORDS	Document No
2025.02.13			
Edition	Size	**H05VV-F 3G 0.75mm^2**	Page
A			1/2

1. Standard: IEC 60227 IEC60228
2. Construction & Dimension

Item		Specification
Conductor	Size	3G 0.75mm^2
	Material	Annealed Bare Copper
	Construction	24/ § 0.202±0.008
Insulation	Material	PVC
	Minimum Average Thickness	0.60mm
	Minimum Thickness at any point	0.44mm
	Diameter	2.35 ± 0.10
	Identification	Blue,Brown,Green/Yellow
Core Assembly	Core Twist	3-Core
	Filler	NA
	Assembly Pair	NA
Taping	Mylar Foil	NA
Shielded	A1-Mylar Foil	NA
Drain	Material	NA
	Construction	NA
Jacket	Material	PVC
	Minimum Average Thickness	0.8mm
	Minimum Thickness at any point	0.58mm
	Overall Diameter(Approx)	6.7 ± 0.2
	Color	Any Color

Marking:

Yung Li Co., Ltd. H05VV-F 3G 0.75mm^2 ◁VDE▷ CE SAA-190646-EA
SU01027-4002 CCC A004049 60227 IEC 53(RVV) 300/500V

YUNG LI CO., LTD
SPECIFICATION

Yung Li	Style	PVC FLEXIBLE CORDS	Document No
2025.02.13			
Edition	Size	**H05VV-F 3G 0.75mm^2**	Page
A			2/2

3.Electrical & Physical Properties

Item			Specification
Rating Voltage			70℃ 300/500V
Conductor resistance(AT 20℃)			26.0Ω/Km MAX
Insulation Resistance(AT 70℃)			0.011MΩ/Km Min
Dielectric Strength			AC 2.0 KV / 15 min No Brcak
Spark Test			6.0KV
Insulation	Unaged	Tensile Strength	1.02 kgf/mm^2 min
		Elongation	150% Min
	Aged	Tensile Strength	80~120% (80℃x168hrs)
		Elongation	80~120% (80℃x168hrs)
	Loss of mass Test		2.0mg/cm^2 (max)
Jacket	Unaged	Tensile Strength	1.02 kgf/mm^2 min
		Elongation	150% Min
	Aged	Tensile Strength	80~120% (80℃x168hrs)
		Elongation	80~120% (80℃x168hrs)
	Loss of mass Test		2.0mg/cm^2 (max)
Deformation Test			70±2℃ X 4hr ≦ 50%
Cold Bend Test			-15℃ x 1hr No Crack
Heat Shock Test			150±2℃ x 1hr No Crack

Graph:

intertek
Total Quality. Assured.

ASTA LICENCE

ASTA DIAMOND MARK

Licence No.	**1359**
Organization:	**Yung Li Co., Ltd** No. 32 Da Pu Industrial Zone Chang Ping Town Dongguan City Guangdong Province 523571, China
Product:	Fused Plug
Designation:	YP-61A
Colour(s):	All Colours
Characteristics:	250 Volts a.c. 50 Hz, 13 Amperes Non-rewirable Rough use (BS1363/A) Crimped terminations Solid nickel-plated brass L & N pins Solid moulded-on construction Brass E pin, alternatively ISOD
Approval Standard:	BS 1363-1: 2023
Issue Number:	5
Review Date:	30 September 2029
Factory Reference:	LQ-494, ILIEVT.A1

R. W. Hayward	**Name**
R. Hayward	**Signature**
29 May 2026	**Date**

This Licence is for the exclusive use of Intertek's client and is provided pursuant to the agreement between Intertek and its Client. Intertek's responsibility and liability are limited to the terms and conditions of the agreement. Intertek assumes no liability to any party, other than to the Client in accordance with the agreement, for any loss, expense or damage occasioned by the use of this Licence. Only the Client is authorized to permit copying or distribution of this Licence and then only in its entirety. Any use of the Intertek name or one of its marks for the sale or advertisement of the tested material, product or service must first be approved in writing by Intertek.
Issued by Intertek Testing & Certification Ltd., Academy Place, 1-9 Brook Street, Brentwood CM14 5NQ, United Kingdom
a UKAS accredited certification body, No. 0010

THE SINGAPORE CONSUMER PROTECTION
(SAFETY REQUIREMENTS) REGISTRATION SCHEME

intertek
Total Quality. Assured.

CERTIFICATE OF CONFORMITY (COC)

To: 200719284D (Company UEN no.)
Global Approvals Pte Ltd
108 Bedok Reservoir Road
#02-320
Singapore 470108

Attn: Mr Andrew Lin

Date of certification : 15 August 2018

Date of re-certification : 04 July 2024

Date of expiry : 14 August 2027

Certificate number : 180890-12

Dear Sir/Madam,

We certify that the following Controlled Goods complied with the Mandatory Requirements of the Consumer Protection (Safety Requirements) Regulations:

Description of controlled goods: 13A non-rewireable fused plug with cable

Trade name: YUNG-LI

Model number: YP-61A

Country where the product is likely to be manufactured: China

Test report number: 240524233GZU-001

Testing laboratory: Intertek Testing Services Shenzhen Ltd. Guangzhou Branch

Tested according to: SS 145: Part 1: 2019

Ong Keng Chuan

Intertek Testing Services (Singapore) Pte Ltd

Important Notice:
No Controlled Goods can be supplied in Singapore unless they are registered with the Consumer Product Safety Office (CPSO). Please access https://www.cpsaplus.gov.sg/Homepage for registration procedure.

هيئة التقييس الخليجية
GCC Standardization Organization

0012-9458

Scan or click to verify

شهادة مطابقة خليجية / شهادة فحص الطراز الخليجية

وفقاً للائحة الفنية الخليجية للأجهزة والمعدات الكهربائية منخفضة الجهد BD-142004-01 الملحق 4

GSO Certificate of Conformity / Gulf Type Examination Certificate

According to GSO Technical Regulation for Low Voltage Equipment and Appliances BD-142004-01 Annex (4)

Certificate No.	0012-9458 R 1	Date of Issue	2024-06-23	Revision Date	2025-05-02	Date of Expiry	2027-10-17

Certification Body — جهة منح الشهادة

NB 0012 - Intertek Testing Services Limited Shanghai
West Area, 2nd Floor, No.707, Zhangyang Road, China (Shanghai) Pilot Free Trade Zone
Click here for contact details https://www.gso.org.sa/nb/notified-body-detail/0012
Certificate Internal Reference Number CN-GSOG-20180667R4

Manufacturer — الصانع

YUNG LI CO., LTD.
No. 32, Dapu Industrial St.,Changping Town, Dongguan City, Guangdong Province, 523571, China

Product Detail — تفاصيل المنتج

Product Number	19186	رقم المنتج
Category	Household Plugs, Socket outlets, Adaptors, Cord Extension Sets and chargers	الفئة
Scope	Plugs and socket-outlets	النطاق
Product Description	Non-rewirable Fused Plug	تفاصيل المنتج
Trademark / Brand	YUNG-LI	العلامة التجارية
Models	YP-61A	الطرازات
Country of Manufacture	China	بلد الصنع

Factory — المصنع

YUNG LI CO., LTD.
No. 32, Dapu Industrial St.,Changping Town, Dongguan City, Guangdong Province, 523571, China
— *All models.*

Technical Details — البيانات الفنية

Model الطراز	Rated Voltage الجهد المقنن	Rated Frequency التردد	Dimensions الأبعاد
YP-61A	1P: 250*V*		50*40*70*mm*

Additional Technical Details — البيانات الفنية الإضافية

Model	Rated current	Additional information
YP-61A	Max 13A	Colour(s): all colours; Solid nickel plated brass L, N & E pins, Alternatively lSOD;

هذه شهادة إلكترونية لا تحتاج لتوقيع او ختم، امسح رمز الاستجابة السريعة للتحقق من الشهادة.
This electronically generated certificate is valid without stamp and signature. Scan the QR code to verify this document.

هيئة التقييس الخليجية
GCC Standardization Organization

0012-9458

Scan or click to verify

شهادة مطابقة خليجية / شهادة فحص الطراز الخليجية

وفقاً للائحة الفنية الخليجية للأجهزة والمعدات الكهربائية منخفضة الجهد BD-142004-01 الملحق 4

GSO Certificate of Conformity / Gulf Type Examination Certificate

According to GSO Technical Regulation for Low Voltage Equipment and Appliances BD-142004-01 Annex (4)

Certificate No.	0012-9458 R 1	Date of Issue	2024-06-23	Revision Date	2025-05-02	Date of Expiry	2027-10-17

Additional Technical Details — البيانات الفنية الإضافية

Model	Rated current	Additional information
		Rough use; Solid moulded-on constructions; Crimped terminations, for rough use

Countries Considered — دول الامتثال

This certificate is applicable in the following member states — هذه الشهادة تنطبق على الدول الأعضاء التالية

UNITED ARAB EMIRATES, BAHRAIN, KUWAIT, OMAN, QATAR, SAUDI ARABIA, YEMEN — *All models.*

Standards Applied — المواصفات القياسية المطبقة

SASO 2203:2018

BS 1363-1:2023

Documents — الوثائق

Safety Test Report	Reference No.250121084GZU-001	Issue Date: 2025-03-24
Evaluation Report	Reference No.250121084GZU	Issue Date: 2025-04-10

هذه شهادة إلكترونية لا تحتاج لتوقيع او ختم، امسح رمز الاستجابة السريعة للتحقق من الشهادة.
This electronically generated certificate is valid without stamp and signature. Scan the QR code to verify this document.

No Lesen : **PC011743**
Licence No :

LESEN PENSIJILAN BARANGAN
Product Certification Licence

SIRIM

ACB 001

SIRIM QAS International Sdn. Bhd. dengan ini menganugerahkan kepada
SIRIM QAS International Sdn. Bhd. hereby grants to

ZUFENG MARKETING
NO. 45-2, JALAN TIARA 2B
BANDAR BARU KLANG
41150 KLANG
SELANGOR, MALAYSIA

Lesen untuk menggunakan Tanda Pensijilan di atas barangan
a licence to use the Certification Mark on

FUSED PLUGS

Please refer to detail in the SCHEDULE

sebagai mematuhi keperluan
as complying with

MS 589-1 : 2018

Ts. Md. Adha bin Katni @ Rahmat
Pemangku Ketua Pegawai Eksekutif
Acting Chief Executive Officer
SIRIM QAS International Sdn. Bhd.

SIRIM QAS International Sdn. Bhd.
(No. Syarikat 199601037981(410334-X))

1, Persiaran Dato' Menteri
Seksyen 2, Peti Surat 7035
40700 Shah Alam
Selangor Darul Ehsan
MALAYSIA.

Tel : 603-5544 6000
Emel : cserviceqas@sirim.my

https://www.sirim-qas.com.my
https://www.malaysiancertified.com.my

Tarikh Mula Pensijilan	**: 28 June 2022**	**Tarikh Dikeluarkan**	**: 03 July 2025**
Certified Since		*Issue Date*	
Sah Sehingga	**: 28 June 2026**	**No Siri**	: 113151
Valid Until		*Serial No*	

Lesen ini dianugerahkan tertaklukkepada syarat-syarat Perjanjian Pensijilan Barangan SIRIM QAS International Sdn. Bhd.
This Licence is granted subject to the provisions of the Product Certification Agreement of SIRIM QAS International Sdn. Bhd.

香港認証中心
The Hong Kong Certification Centre Ltd

HONG KONG SAFETY MARK LICENSE

License Number: L00244A (modification) **Date of Issue :** 2026-03-27

Issued To: Yung Li Co. Ltd.
No. 32 Da Pu Industrial Zone,
Chang Ping Town, Dongguan
City, Guangdong, 523571
China

Manufacturer: Yung Li Co. Ltd.
No. 32 Da Pu Industrial Zone,
Chang Ping Town, Dongguan
City, Guangdong, 523571
China

This is to certify that the products listed below are eligible to bear the Hong Kong Safety Mark subject to compliance of annual surveillance of factory inspection.

Issued By : Richard Fung
Managing Director

香港安全標誌
Hong Kong Safety Mark

For and on behalf of
The Hong Kong Certification Centre Limited

Product Category
Wiring Accessories

Product Description
Non-rewirable fused plug molded on power cord

Type/Models
[Brand Name : Yung Li]
YP-61A

Applicable Standard(s) / Requirements
BS1363-1:2023 - 13A Plugs, socket-outlets, adaptors and connection units – Part 1: Rewirable and non-rewirable 13A fused plugs - Specification

Certification report: L00244-3

Note: 1. This License is applicable to the listed product exported to foreign countries (including Hong Kong and Macau)
2. This License supersedes the License no. L00244A issued on 2023-07-01

Product certification system is Type 5 as defined in ISO/IEC 17067:2013.
The use of this License is governed by the HKCC Regulations for Product Certification and any other requirement accompanying this License when issued, as amended from time to time.

This License is the property of The Hong Kong Certification Centre Limited and must be returned upon request.

Original Certification: 2005-04-29 Expiry: 2029-06-30 Certification Scheme: CC/SCH/008 Rev 1

Unit B, 10/F., Block 1, Tai Ping Industrial Centre, No. 57 Ting Kok Road, Tai Po, N.T., Hong Kong 香港新界大埔汀角路57號太平工業中心第一座10樓B室
Tel / 電話: (852) 2661 2083 Fax / 傳真: (852) 2661 3181 Email / 電郵: hkcc@hk-cc.hk Homepage / 網址: www.hk-cc.hk

Test Verification of Conformity

Verification Number: 180731117GZU-001VOC

On the basis of the tests undertaken, the sample<s> of the below product have been found to comply with the requirements of the referenced specification<s>/standard<s> at the time the tests were carried out. This verification is part of the full test report<s> and should be read in conjunction with it <them>.

Applicant Name & Address:	Yung Li Co.Ltd. Da Pu Industrial Zone,Gangzi Chang Ping Town,Dongguan City,Guangdong,China
Product Description:	Non-rewirable fused plug
Ratings & Principle Characteristics:	250V ~ , Max 13A
Models/Type References:	YP-61A
Brand Name<s>:	YUNG-LI
Specification<s>/ Standard<s>:	SASO 2203:2018/ PLUGS AND SOCKET-OUTLETS FOR HOUSEHOLD AND SIMILAR PURPOSES SAFETY REQUIREMENTS AND TEST METHODS 250 V/13 A
Verification Issuing Office Name & Address:	Intertek Testing Services Shenzhen Ltd. Guangzhou Branch Block E, No.7-2 Guang Dong software Science Park, Caipin Road, Guangzhou Science City, GETDD, Guangzhou, China
Test Report Number<s>:	180731117GZU-001: Sep. 07, 2018

Signature

Name: Hunter Chu
Position: Supervisor
Date: Sep. 12, 2018

This Verification is for the exclusive use of Intertek's client and is provided pursuant to the agreement between Intertek and its Client. Intertek's responsibility and liability are limited to the terms and conditions of the agreement. Intertek assumes no liability to any party, other than to the Client in accordance with the agreement, for any loss, expense or damage occasioned by the use of this Verification. Only the Client is authorized to permit copying or distribution of this Verification. Any use of the Intertek name or one of its marks for the sale or advertisement of the tested material, product or service must first be approved in writing by Intertek. The observations and test/inspection results referenced in this Verification are relevant only to the sample tested/inspected. This Verification by itself does not imply that the material, product, or service is or has ever been under an Intertek certification program.

ZEICHENGENEHMIGUNG
MARKS APPROVAL

Yung Li Co. Ltd.
No. 32 Dapu Industrial St., Changping Town
523571 Dongguan City
Guangdong
China

ist berechtigt, für ihr Produkt /
is authorized to use for their product

Gerätesteckdose, nicht-wiederanschließbar
Connector, non-rewirable

die hier abgebildeten markenrechtlich geschützten Zeichen
für die ab Blatt 2 aufgeführten Typen zu benutzen /
the legally protected Marks as shown below for the types referred to on page 2 ff.

und/oder - *and/or*

Geprüft und zertifiziert nach /
Tested and certified according to

DIN EN IEC 60320-1 (VDE 0625-1):2023-06; EN IEC 60320-1:2021

Das Produkt erfüllt auch die Anforderungen nach /
The product also fulfills the requirements of

IEC 60320-1:2021

Aktenzeichen: 1609800-1550-0003 / 305888
File ref.:

VDE Prüf- und Zertifizierungsinstitut GmbH
VDE Testing and Certification Institute
Zertifizierungsstelle / *Certification*

Ausweis-Nr. 40029577 Blatt 1
Certificate No. *Page*

Weitere Bedingungen siehe Rückseite und Folgeblätter /
further conditions see overleaf and following pages

Offenbach, 2010-03-05
(letzte Änderung / updated 2024-01-17)

M. Ackermann

Name und Sitz des Genehmigungs-Inhabers / *Name and registered seat of the Certificate holder*
Yung Li Co. Ltd., No. 32 Dapu Industrial St., Changping Town, 523571 DONGGUAN CITY, Guangdong, CHINA

Aktenzeichen / *File ref.*
1609800-1550-0003 / 305888 / TL3 / E

letzte Änderung / *updated* 2024-01-17

Datum / *Date* 2010-03-05

Dieses Blatt gilt nur in Verbindung mit Blatt 1 des Zeichengenehmigungsausweises Nr. 40029577.
This supplement is only valid in conjunction with page 1 of the Certificate No. 40029577.

Gerätesteckdose, nicht-wiederanschließbar
Connector, non-rewirable

Typ(en) / *Type(s)*

1) YC-12
2) YC-12L
3) YC-12L-1
4) YC-12L-2
5) YC-12L-3

Bemessungsspannung *Rated voltage*	AC 250 V
Bemessungsstrom *Rated current*	10 A
Polzahl *Number of poles*	2-polig mit Schutzkontakt *2-pole with earthing contact*
Bauart *Kind of construction*	Normblatt C13 *standard sheet C13*
Ausführung(en) *Construction(s)*	zentrale Leitungseinführung *straight cable entry* Für / *for* 1) abgewinkelte Leitungseinführung *angled cable entry* Für / *for* 2), 3), 4), 5)

Fortsetzung siehe Blatt 3 /
continued on page 3

VDE Prüf- und Zertifizierungsinstitut
Zeichengenehmigung

Name und Sitz des Genehmigungs-Inhabers / *Name and registered seat of the Certificate holder*
Yung Li Co. Ltd., No. 32 Dapu Industrial St., Changping Town, 523571 DONGGUAN CITY, Guangdong, CHINA

Aktenzeichen / *File ref.*	letzte Änderung / *updated*	Datum / *Date*
1609800-1550-0003 / 305888 / TL3 / E	2024-01-17	2010-03-05

Dieses Blatt gilt nur in Verbindung mit Blatt 1 des Zeichengenehmigungsausweises Nr. 40029577.
This supplement is only valid in conjunction with page 1 of the Certificate No. 40029577.

Warenzeicheninhaber *Trademark holder*	Yung Li Co. Ltd.
Produktinformation *Product information*	siehe Anlagen Nr. 300 + 700 + 701 + 702 + 900 vom 2024-01-17. *see Appendix No. 300 + 700 + 701 + 702 + 900 dated 2024-01-17.*

Dieser Zeichengenehmigungsausweis bildet eine Grundlage für die EU-Konformitätserklärung und CE-Kennzeichnung durch den Hersteller oder dessen Bevollmächtigten.
This Marks Approval is a basis for the EU Declaration of Conformity and the CE Marking by the manufacturer or his agent.

Merianstrasse 28, D-63069 Offenbach
Phone +49 (0) 69 83 06-0
Telefax +49 (0) 69 83 06-555

VDE Prüf- und Zertifizierungsinstitut
Zeichengenehmigung

Ausweis-Nr. / *Certificate No.* 40029577

Beiblatt / *Supplement*

Name und Sitz des Genehmigungs-Inhabers / *Name and registered seat of the Certificate holder*
Yung Li Co. Ltd., No. 32 Dapu Industrial St., Changping Town, 523571 DONGGUAN CITY, Guangdong, CHINA

Aktenzeichen / *File ref.*
1609800-1550-0003 / 305888 / TL3 / E

letzte Änderung / *updated*
2024-01-17

Datum / *Date*
2010-03-05

Dieses Beiblatt ist Bestandteil des Zeichengenehmigungsausweises Nr. 40029577.
This supplement is part of the Certificate No. 40029577.

Gerätesteckdose, nicht-wiederanschließbar
Connector, non-rewirable

Fertigungsstätte(n)
Place(s) of manufacture

Referenz/*Reference* **30008928**	Yung Li Co. Ltd. No. 32 Dapu Industrial St., Changping Town 523571 DONGGUAN CITY Guangdong CHINA

VDE Prüf- und Zertifizierungsinstitut
Zeichengenehmigung

Ausweis-Nr. / *Certificate No.* 40029577

Infoblatt / *Info sheet*

Name und Sitz des Genehmigungs-Inhabers / *Name and registered seat of the Certificate holder*
Yung Li Co. Ltd., No. 32 Dapu Industrial St., Changping Town, 523571 DONGGUAN CITY, Guangdong, CHINA

Aktenzeichen / *File ref.*
1609800-1550-0003 / 305888 / TL3 / E

letzte Änderung / *updated* 2024-01-17

Datum / *Date* 2010-03-05

Dieses Blatt gilt nur in Verbindung mit Blatt 1 des Zeichengenehmigungsausweises Nr. 40029577.
This supplement is only valid in conjunction with page 1 of the Certificate No. 40029577.

Genehmigung zum Benutzen des auf Seite 1 abgebildeten markenrechtlich geschützten Zeichens des VDE:

Grundlage für die Benutzung sind die Allgemeinen Geschäftsbedingungen (AGB) der VDE Prüf- und Zertifizierungsinstitut GmbH (www.vde.com\AGB-Institut). Das Recht zur Benutzung erstreckt sich nur auf die bezeichnete Firma mit den genannten Fertigungsstätten und die oben aufgeführten Produkte mit den zugeordneten Bezeichnungen. Die Fertigungsstätte muss so eingerichtet sein, dass eine gleichmäßige Herstellung der geprüften und zertifizierten Ausführung gewährleistet ist.
Die Genehmigung ist so lange gültig wie die VDE-Bestimmungen gelten, die der Zertifizierung zugrunde gelegen haben, sofern sie nicht auf Grund anderer Bedingungen aus der VDE Prüf- und Zertifizierungsordnung (PM102) zurückgezogen werden muss.
Der Gültigkeitszeitraum einer VDE-GS-Zeichengenehmigung kann auf Antrag verlängert werden. Bei gesetzlichen und / oder normativen Änderungen kann die VDE-GS-Zeichengenehmigung ihre Gültigkeit zu einem früheren als dem angegebenen Datum verlieren.
Produkte, die das Biozid Dimethylfumarat (DMF) enthalten, dürfen gemäß der Kommissionsentscheidung 2009/251/EG nicht mehr in den Verkehr gebracht oder auf dem Markt bereitgestellt werden.
Der VDE-Zeichengenehmigungsausweis wird ausschließlich auf der ersten Seite unterzeichnet.

Approval to use the legally protected Mark of the VDE as shown on the first page:
Basis for the use are the general terms and conditions of the VDE Testing and Certification Institute (www.vde.com\terms-institute). The right to use the mark is granted only to the mentioned company with the named places of manufacture and the listed products with the related type references. The place of manufacture shall be equipped in a way that a constant manufacturing of the certified construction is assured.
The approval is valid as long as the VDE specifications are in force, on which the certification is based on, unless it is withdrawn according to the VDE Testing and Certification Procedure (PM102E).
The validity period of a VDE-GS-Mark Approval may be prolonged on request. In case of changes in legal and / or normative requirements, the validity period of a VDE-GS-Mark Approval may be shortened.
Products containing the biocide dimethylfumarate (DMF) may not be marketed or made available on the EC market according to the Commission Decision 2009/251/EC.
The approval is solely signed on the first page.

NSW OFFICE OF Fair Trading DEPARTMENT OF COMMERCE for consumers & traders

Certificate Number: 22012

CERTIFICATE OF APPROVAL

ISSUED PURSUANT TO THE ELECTRICITY (CONSUMER SAFETY) ACT 2004

ISSUED TO:

Yung Li Co Ltd

CLASS OF ARTICLE:

Appliance Connector

DESCRIPTION OF ARTICLE:

Appliance Connector
(Non-rewirable, straight entry, Group 1, C13 appliance connector for cold conditions for Class I equipment integrally moulded to any <HAR> certified H05VV-F 3G1.00mm² or Australian approved three-core, 1.00mm², PVC insulated and sheathed ordinary duty circular flexible cord)
250V, ac, 10A

EXAMINED FOR COMPLIANCE WITH: AS/NZS 60320.1 : 2004

TYPE REFERENCE CODE: Type No. YC-12

APPROVAL MARK:

Each electrical article of the abovementioned type shall be marked with Approval Number NSW22012 or N14877 ;or
the Regulatory Compliance Mark (RCM) provided that the requirements of all relevant parts of AS/NZS 4417 applicable to the article are fulfilled.

DATE OF APPROVAL: 31 October 2006
This approval expires 31 October 2011 unless suspended, cancelled, renewed or extended.

for Commissioner for Fair Trading

NSW OFFICE OF
Fair Trading
DEPARTMENT OF COMMERCE

for consumers & traders

Ref: 22012/1

ADDENDUM TO CERTIFICATE OF APPROVAL 22012

Particulars of Modification(s)

1. **Type No. YC-12 alternatively moulded to any <HAR> certified H05VV-F 3G0.75mm² or Australian approved, three-core, 0.75mm², PVC insulated and sheathed ordinary duty circular flexible cord not exceeding two metres in length.**

2. **Type No. YP-32 being similar to original Type No. YC-12 except a Standard Sheet 'E' Interconnection Plug Connector (AS/NZS 60320.2.2) alternatively moulded to either:-**

   (a) **Any <HAR> certified H05VV-F 3G1.00mm² or equivalent Australian approved flexible cord; or**
   (b) **Any <HAR> certified H05VV-F 3G0.75mm² or equivalent Australian approved flexible cord not exceeding two metres in length.**

3. **Type No. YC-12 alternatively moulded to any <HAR> certified H05VV-F 3G1.5mm² or Australian approved three-core, 1.5mm², PVC insulated and sheathed ordinary duty circular flexible cord.**

Approved: 31 October 2006

for Commissioner for Fair Trading

Safety and Standards Branch, Office of Fair Trading, Bradfield Road, Lindfield West
Email: energyapprovals@oft.commerce.nsw.gov.au
www.fairtrading.nsw.gov.au 13 32 20

Ref: NSW22012/4

RENEWAL OF CERTIFICATE OF APPROVAL: NSW22012

Particulars of Renewal

The approval of the original appliance connector Model YC-12 and all approved modifications has been renewed for a period of FIVE years.

The Approval expires on 31/10/2026 unless it is renewed, extended, suspended or cancelled.

Approved pursuant to Clause 11 (1) of the Gas and Electricity (Consumer Safety) Regulation 2018

6 August 2021

For Secretary, Department of Customer Service

Electrical & Gas Approvals, NSW Fair Trading,
PO Box 972, Parramatta NSW 2124
02 9895 0722

Email: energyapprovals@customerservice.nsw.gov.au
Website: www.fairtrading.nsw.gov.au

Vkan Certification & Testing Co., Ltd.

Verification of Compliance

No. UKCA21-0004

Applicant:	**Yung-Li Co. Ltd.** Da Pu Industrial Zone, Gang Zi Chang Ping Town, 523571, Dongguan City, Guangdong, CHINA
Product/Material:	**Connector for 10A/250V for use in class I equipment in cold conditions**
Trade Mark:	—
Model/Type:	YC-12, YC-12L
Rated Specification:	See Appendix
Regulation(s) Complied with:	Appliance couplers for household and similar general purposes – Part 1:General requirements
Tested According to:	BS EN 60320-1:2015
Referred to the Technical Report:	UKCA2021-0005(XG1)

This verification of compliance is based on an evaluation of a tested sample of the product mentioned above. It does not imply assessment of series-production of the product. The applicant should hold the whole technical report at the disposal of the competent authority.
Provided it is also in conformity with any other UK regulations, the manufacturer or its authorized representative should draw up a UK Declaration of Conformity and affix the UKCA mark shown below to each conforming product.

ilac-MRA CNAS 中国认可 国际互认 检测 TESTING CNAS L0095

UK CA

Signed by: Xiaogiang

Xie Haojiang

Date of Issue: Mar. 3rd, 2021

LTC-C-0041-UKCA-G0

Vkan Certification & Testing Co., Ltd.
No. 3, Tiantaiyi Road, Kaitai Avenue, Science City, Guangzhou, 510663, P. R. China
Tel.: +86-20-32293888, Fax: +86-20-32293889 E-mail: office@cvc.org.cn
www.cvc.org.cn

Vkan Certification & Testing Co., Ltd.

Verification of Compliance

APPENDIX to C.O.C No. UKCA21-0004

Rated Specification:	YC-12 10A 250V~ (provided with H05VV-F 3G0,75/1/1,5mm^2, H05V2V2-F 3G0,75/1/1,5mm^2, H05RR-F 3G0,75/1/1,5mm^2, H05RN-F 3G0,75/1mm^2), YC-12L 10A 250V~ (provided with H05VV-F 3G0,75/1/1,5mm^2, H05V2V2-F 3G0,75/1/1,5mm^2; H05RR-F 3G0,75/1/1,5mm^2, H05RN-F 3G0,75/1mm^2)

Signed by:

Xie Haojiang

Date of Issue: Mar. 8th, 2021

LTC-C-0041-UKCA-G0

Vkan Certification & Testing Co., Ltd.
No. 3, Tiantaiyi Road, Kaitai Avenue, Science City, Guangzhou, 510663, P. R. China
Tel.: +86-20-32293888, Fax: +86-20-32293889 E-mail: office@cvc.org.cn
www.cvc.org.cn

VDE Prüf- und Zertifizierungsinstitut

ZEICHENGENEHMIGUNG
MARKS APPROVAL

Yung-Li Co. Ltd.
Da Pu Industrial Zone, Cang Zi
Chang Ping Town
523571 DONG GUAN CITY
Guangdong
CHINA

ist berechtigt, für ihr Produkt /
is authorized to use for their product

Starkstromleitungen für allgemeine Anwendungen
- Flexible Leitungen
mit thermoplastischer PVC-Isolierung

Cables for general applications
- Flexible cables with
thermoplastic PVC insulation

die hier abgebildeten markenrechtlich geschützten Zeichen
für die ab Blatt 2 aufgeführten Typen zu benutzen /
the legally protected Marks as shown below for the types referred to on page 2 ff.

◁VDE▷ oder/*or* ◁>⊓ш▷ oder/*or* schwarz *black* rot *red*

Geprüft und zertifiziert nach /
Tested and certified according to

DIN EN 50525-2-11 (VDE 0285-525-2-11):2012-01; EN 50525-2-11:2011

Aktenzeichen: 1609800-5140-0005 / 211124
File ref.:
Ausweis-Nr. 40010145 Blatt 1
Certificate No. *Page*
Weitere Bedingungen siehe Rückseite und Folgeblätter /
further conditions see overleaf and following pages
Offenbach, 2004-04-27
(letzte Änderung / updated 2015-05-26)

VDE Prüf- und Zertifizierungsinstitut GmbH
VDE Testing and Certification Institute
Zertifizierungsstelle / *Certification*

M. Tasotti

VDE Zertifikate sind nur gültig bei Veröffentlichung unter: http://www.vde.com/zertifikat
VDE certificates are valid only when published on: *http://www.vde.com/certificate*

VDE

VDE Prüf- und Zertifizierungsinstitut
Zeichengenehmigung

Name und Sitz des Genehmigungs-Inhabers / *Name and registered seat of the Certificate holder*
Yung-Li Co. Ltd., Da Pu Industrial Zone, Cang Zi, Chang Ping Town, 523571 DONG GUAN CITY, Guangdong, CHINA

Aktenzeichen / *File ref.*	letzte Änderung / *updated*	Datum / *Date*
1609800-5140-0005 / 211124 / CC5 / HEG	2015-05-26	2004-04-27

Dieses Blatt gilt nur in Verbindung mit Blatt 1 des Zeichengenehmigungsausweises Nr. 40010145.
This supplement is only valid in conjunction with page 1 of the Certificate No. 40010145.

Starkstromleitungen für allgemeine Anwendungen - Flexible Leitungen mit thermoplastischer PVC-Isolierung

Cables for general applications - Flexible cables with thermoplastic PVC insulation

Typ(en) / *Type(s)*

H03VV-F 2...4 x 0,5...0,75 mm²	+
H03VVH2-F 2 x 0,5...0,75 mm²	+
H05VV-F 2...5 x 0,75...4 mm²	+
H05VVH2-F 2 x 0,75...1,0 mm²	+

Leitungsbauart *Type of cable*	Standardleitungen *General purpose cables*
Firmenzeichen *Trademark*	Yung Li Co., Ltd.

Dieser Zeichengenehmigungs-Ausweis bildet eine Grundlage für die EG-Konformitätserklärung und CE-Kennzeichnung durch den Hersteller oder dessen Bevollmächtigten und bescheinigt die Konformität mit den grundlegenden Schutzanforderungen der **EG-Niederspannungsrichtlinie 2006/95/EG** mit ihren Änderungen.
*This Marks Approval is a basis for the EC Declaration of Conformity and the CE Marking by the manufacturer or his agent and proves the conformity with the essential safety requirements of the **EC Low-Voltage Directive 2006/95/EC** including amendments.*

VDE Prüf- und Zertifizierungsinstitut GmbH
VDE Testing and Certification Institute
Fachgebiet CC5
Section CC5

Merianstrasse 28, D-63069 Offenbach
Phone +49 (0) 69 83 06-0
Telefax +49 (0) 69 83 06-555

VDE Prüf- und Zertifizierungsinstitut
Zeichengenehmigung

Ausweis-Nr. / *Certificate No.* 40010145

Beiblatt / *Supplement*

Name und Sitz des Genehmigungs-Inhabers / *Name and registered seat of the Certificate holder*
Yung-Li Co. Ltd., Da Pu Industrial Zone, Cang Zi, Chang Ping Town, 523571 DONG GUAN CITY, Guangdong, CHINA

Aktenzeichen / *File ref.*	letzte Änderung / *updated*	Datum / *Date*
1609800-5140-0005 / 211124 / CC5 / HEG	2015-05-26	2004-04-27

Dieses Beiblatt ist Bestandteil des Zeichengenehmigungsausweises Nr. 40010145.
This supplement is part of the Certificate No. 40010145.

Starkstromleitungen für allgemeine Anwendungen - Flexible Leitungen mit thermoplastischer PVC-Isolierung

Cables for general applications - Flexible cables with thermoplastic PVC insulation

Fertigungsstätte(n)
Place(s) of manufacture

Referenz/*Reference*	
30008928	Yung-Li Co. Ltd. Da Pu Industrial Zone, Cang Zi Chang Ping Town 523571 DONG GUAN CITY Guangdong CHINA

VDE Prüf- und Zertifizierungsinstitut GmbH
VDE Testing and Certification Institute
Fachgebiet CC5
Section CC5

Merianstrasse 28, D-63069 Offenbach

Phone +49 (0) 69 83 06-0
Telefax +49 (0) 69 83 06-555

VDE Prüf- und Zertifizierungsinstitut
Zeichengenehmigung

Ausweis-Nr. / *Certificate No.* 40010145

Infoblatt / *Info sheet*

Name und Sitz des Genehmigungs-Inhabers / *Name and registered seat of the Certificate holder*
Yung-Li Co. Ltd., Da Pu Industrial Zone, Cang Zi, Chang Ping Town, 523571 DONG GUAN CITY, Guangdong, CHINA

Aktenzeichen / *File ref.*	letzte Änderung / *updated*	Datum / *Date*
1609800-5140-0005 / 211124 / CC5 / HEG	2015-05-26	2004-04-27

Dieses Blatt gilt nur in Verbindung mit Blatt 1 des Zeichengenehmigungsausweises Nr. 40010145.
This supplement is only valid in conjunction with page 1 of the Certificate No. 40010145.

Genehmigung zum Benutzen des auf Seite 1 abgebildeten markenrechtlich geschützten Zeichens des VDE:

Grundlage für die Benutzung sind die Allgemeinen Geschäftsbedingungen (AGB) der VDE Prüf- und Zertifizierungsinstitut GmbH (www.vde.com\AGB-Institut). Das Recht zur Benutzung erstreckt sich nur auf die bezeichnete Firma mit den genannten Fertigungsstätten und die oben aufgeführten Produkte mit den zugeordneten Bezeichnungen. Die Fertigungsstätte muss so eingerichtet sein, dass eine gleichmäßige Herstellung der geprüften und zertifizierten Ausführung gewährleistet ist.
Die Genehmigung ist so lange gültig wie die VDE-Bestimmungen gelten, die der Zertifizierung zu- grunde gelegen haben, sofern sie nicht auf Grund anderer Bedingungen aus der VDE Prüf- und Zertifizierungsordnung (PM102) zurückgezogen werden muss.
Der Gültigkeitszeitraum einer VDE-GS-Zeichengenehmigung kann auf Antrag verlängert werden. Bei gesetzlichen und / oder normativen Änderungen kann die VDE-GS-Zeichengenehmigung ihre Gültigkeit zu einem früheren als dem angegebenen Datum verlieren.
Produkte, die das Biozid Dimethylfumarat (DMF) enthalten, dürfen gemäß der Kommissionsent- scheidung 2009/251/EG nicht mehr in den Verkehr gebracht oder auf dem Markt bereitgestellt werden.
Der VDE-Zeichengenehmigungsausweis wird ausschließlich auf der ersten Seite unterzeichnet.

Approval to use the legally protected Mark of the VDE as shown on the first page:
Basis for the use are the general terms and conditions of the VDE Testing and Certification Institute (www.vde.com\terms-institute). The right to use the mark is granted only to the mentioned company with the named places of manufacture and the listed products with the related type references. The place of manufacture shall be equipped in a way that a constant manufacturing of the certified construction is assured.
The approval is valid as long as the VDE specifications are in force, on which the certification is based on, unless it is withdrawn according to the VDE Testing and Certification Procedure (PM102E).
The validity period of a VDE-GS-Mark Approval may be prolonged on request. In case of changes in legal and / or normative requirements, the validity period of a VDE-GS-Mark Approval may be shortened.
Products containing the biocide dimethylfumarate (DMF) may not be marketed or made available on the EC market according to the Commission Decision 2009/251/EC.
The approval is solely signed on the first page.